इंटरनेट मानक

Disclosure to Promote the Right To Information

Whereas the Parliament of India has set out to provide a practical regime of right to information for citizens to secure access to information under the control of public authorities, in order to promote transparency and accountability in the working of every public authority, and whereas the attached publication of the Bureau of Indian Standards is of particular interest to the public, particularly disadvantaged communities and those engaged in the pursuit of education and knowledge, the attached public safety standard is made available to promote the timely dissemination of this information in an accurate manner to the public.

"जानने का अधिकार, जीने का अधिकार"
Mazdoor Kisan Shakti Sangathan
"The Right to Information, The Right to Live"

"पुराने को छोड नये के तरफ"
Jawaharlal Nehru
"Step Out From the Old to the New"

IS 10938 (1984): Searcher, Double Edged with Handle and Sheath [MHD 17: Health Informatics]

"ज्ञान से एक नये भारत का निर्माण"
Satyanarayan Gangaram Pitroda
"Invent a New India Using Knowledge"

Act Number 22 of 2005
The Indian Parliament
RIGHT TO INFORMATION

Made Available By
Public.Resource.Org

"ज्ञान एक ऐसा खजाना है जो कभी चुराया नहीं जा सकता है"
Bhartṛhari—Nītiśatakam
"Knowledge is such a treasure which cannot be stolen"

BLANK PAGE

BRUTUM FULMEN

IGNORANTIA JURIS NON EXCUSAT

PROTECTED BY COPYRIGHT

(Reaffirmed 2006)

Indian Standard

SPECIFICATION FOR SEARCHER, DOUBLE EDGED WITH HANDLE AND SHEATH

1. Scope — Covers requirements for double edged searcher with handle and sheath, used in veterinary surgery.

2. Shape and Dimensions — As shown in Fig. 1.

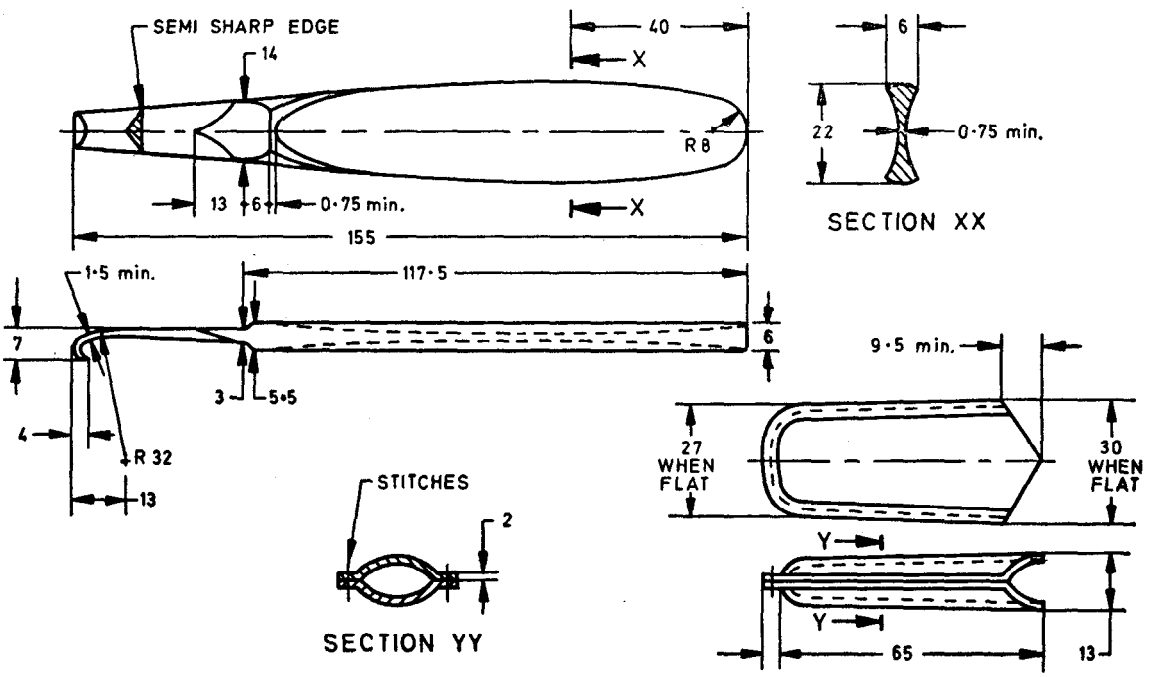

All dimensions in millimetres.

FIG. 1 SEARCHER, DOUBLE EDGED

2.1 The deviations shall conform to coarse class of IS : 2102-1969 'Specification for allowable deviations for dimensions without specified tolerances (*first revision*)'.

3. Materials

Searcher	Stainless steel conforming to Designation 40Cr13 of IS : 6603-1972 'Specification for stainless steel bars and flats'
Handle	Suitable aluminium or plastics (*see* IS : 2543-1964 Specification for cellulose acetate moulding and extrusion materials)
Sheath	Leather harness cow as per IS : 580-1973 'Specification for harness leather (*second revision*)'
Thread	Variety No. 5, 14 or 19 of IS : 1720-1979 'Specification for cotton sewing threads (*second revision*)'

4. Requirements — The surface of the searcher shall be smooth and free from pits, burrs, cracks and other surface defects. The cutting edge shall be sharp, polished bright and passivated. The sheath shall be soundly constructed and finished smooth. There shall not be any loose thread and uneven seam.

5. Hardness — The blade shall have a hardness of 600 *HV, Min,* determined in accordance with IS : 1501-1968 'Method for vickers hardness test for steel (*first revision*)'.

Adopted 27 June 1984 © August 1984, ISI Gr 1

INDIAN STANDARDS INSTITUTION
MANAK BHAVAN, 9 BAHADUR SHAH ZAFAR MARG
NEW DELHI 110002

Veterinary Surgery Instruments Sectional Committee, CPDC 33 [Ref : Doc : CPDC 33 (1636)]

6. Tests — A 19 mm wire nail shall be hammered on a block of teak wood to a depth of 14 mm. The head of the nails shall then be levered by the working ends of the searcher and the nails pulled out from the wood. The searcher shall do the job easily and on completion of the test, the searcher shall show no sign of damage.

6.1 *Corrosion Resistance Test* — Shall conform to IS : 7531-1975 'Method for boiling and autoclaving test for corrosion resistance of stainless steel surgical instruments'.

7. Marking — The searcher shall be clearly and indelibly marked, preferably by etching, with the manufacturer's name, initials or registered trade-mark. Each searcher shall also be marked with the word 'Stainless Steel' or letters 'SS'.

7.1 *ISI Certification Marking* — Details available with the Indian Standards Institution.

8. Packing — The searcher may be packed as agreed to between the purchaser and the supplier.

Printed at Printrade, New Delhi, India